TOYOTA

FCHV

FUEL CELL HYBRID VEHICLE

Emergency Response Guide

Toyota Motor Corporation
Version 2a – for latest version consult http://techinfo.toyota.com

Forward

This guide was developed to educate and assist emergency responders in the safe handling of the Toyota Fuel Cell Hybrid Vehicle (FCHV) following an incident. FCHV emergency response procedures are similar to other Toyota vehicles with the exception of the hydrogen gas system and the high voltage electrical system. It is important to recognize and understand the features and specifications of these systems, as they may not be familiar to emergency responders.

Unlike a conventional gasoline powered vehicle, the FCHV uses:

- 5,076 PSI hydrogen gas storage tanks
- Compressed hydrogen gas in distribution lines, regulators and components
- 400-Volt DC fuel cell generator
- 274-Volt DC Nickel Metal Hydride (NiMH) Hybrid Vehicle (HV) battery pack - similar to the one used in the Toyota Prius hybrid vehicle

High voltage electricity is generated in the fuel cell by electrochemically combining hydrogen gas with oxygen from the air. The byproducts of this reaction are water vapor and heat.

High voltage electricity provided by either the fuel cell or the HV battery pack powers an electric motor and various pumps and compressors through a Power Control Unit (PCU). With the exception of the HV battery, all components containing hydrogen gas or high voltage are isolated from the vehicle cabin and located under the vehicle's floor pan or in the motor compartment under the hood. The HV battery is housed in a metal case and bolted to the frame cross member inside the vehicle, below the rear cargo area cover.

All other conventional automotive electrical devices such as the headlights, radio, and gauges are powered from a separate 12-Volt battery. Numerous safeguards have been designed into the FCHV to help ensure both the hydrogen gas and high voltage components are kept safe and secure in an accident.

The NiMH HV battery pack contains sealed batteries that are similar to rechargeable batteries used in laptop computers, cell phones, and other consumer products. The electrolyte is absorbed in the cell plates and will not normally leak out even if the battery is cracked. In the unlikely event the electrolyte does leak, it can be easily neutralized with a dilute boric acid solution or vinegar.

Compressed hydrogen storage tanks and distribution lines are colored red for identification purposes. High voltage cables, identifiable by orange insulation and connectors, are isolated from the metal chassis of the vehicle. These distribution lines and cables are routed underneath the floor pan and inboard of the frame rail reinforcements. Plastic and metal covers protect hydrogen storage tanks, distribution lines and high voltage cables under the vehicle. Emergency responders at the scene of an accident would not normally access them.

FCHV Emergency Response Guide Companion Video

A companion video summarizing classroom instruction is available by calling the Toyota Material Distribution Center at (800) 622-2033. Refer to material number **00422-ERG04-VIDEO** when placing your order. MDC telephone operators accept Visa and MasterCard credit card orders, Monday through Friday, 8 AM to 5 PM Pacific Time.

Emergency Phone Numbers

(800) 853-5423 - 24 hour Roadside Assistance.

(800) 424-9300 - Material Safety Data Sheets (MSDS) may be requested by contacting CHEMTREC.

About the FCHV

The FCHV is a Fuel Cell – electric Hybrid Vehicle leased in small numbers to customers in select communities in California.

The vehicle body and chassis are based on a modified version of the Toyota Highlander.

Main Topics in this Guide

- Toyota FCHV identification
- Major hydrogen gas and high voltage component locations and descriptions
- Extrication, fire, recovery, and other emergency response information
- Roadside assistance information

This guide is intended to assist emergency responders in the safe handling of an FCHV during an incident.

Table of Contents

FCHV Identification

Exterior

In appearance, the FCHV is similar to the Toyota Highlander. As shown in the pictures, the FCHV may be identified by the ***FCHV Fuel Cell Hybrid Vehicle*** badges located on the hood near the grill area, the right side of the back door, and on the left and right rear doors.

The FCHV can be differentiated from a Toyota Highlander by noting the revised front grill and bumper, the rear spoiler design, the black covers under the rear and sides of the FCHV, and the tail pipe diffuser screen.

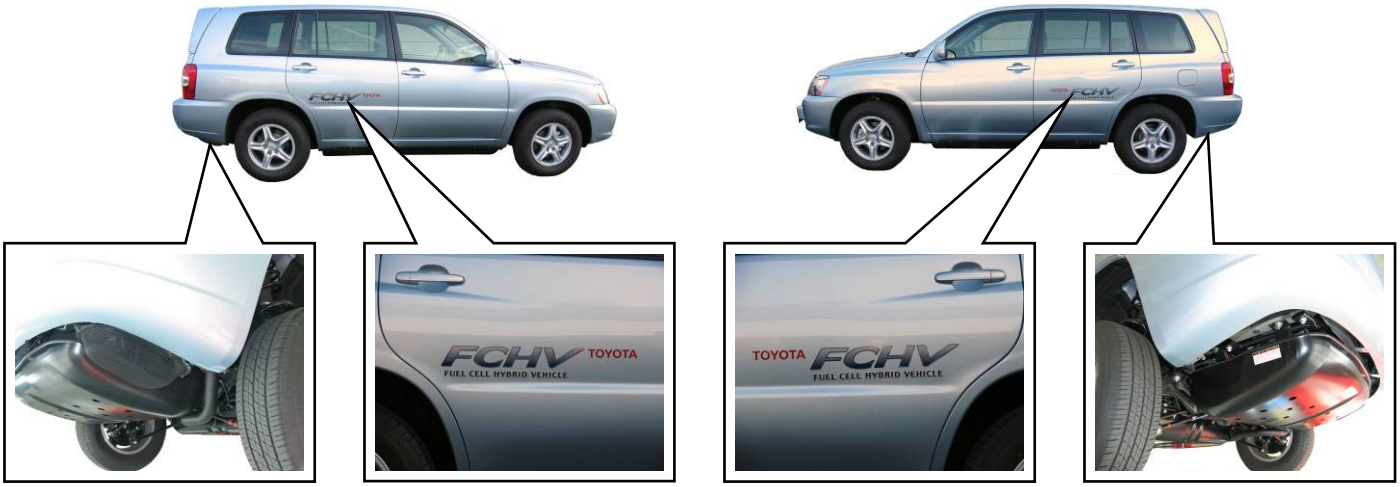

FCHV Identification (Continued)

Interior

As indicated in the pictures the vehicle interior appears similar to the Toyota Highlander. ***FCHV Fuel Cell Hybrid Vehicle*** badges in the interior may be used to identify the vehicle.

Component Locations & Descriptions

Hydrogen Gas Components

Component	Location	Description
Fuel Cell	Motor compartment	Utilizes hydrogen gas and oxygen from the air to generate high voltage electricity.
Hydrogen Pump	Underneath front center area of vehicle	Circulates hydrogen gas through the fuel cell.
Hydrogen Storage Tanks	Underneath rear of vehicle	Four tanks store compressed hydrogen gas at up to 5,076 PSI (35.0 MPa). Each tank possesses a regulator with shut-off valve mechanism.
Tank Regulator and Shut-Valve Mechanism	Mounted on the left-hand side of each hydrogen storage tank	Regulates compressed hydrogen gas pressure at the outlet of each tank to a lower pressure. Shuts off hydrogen flow from each tank with normally closed (no hydrogen flow) solenoid.
Temperature Relief Device (TRD)	Mounted on the tank regulator and shut valve mechanism	Fusible temperature plug that quickly vents hydrogen gas in the tank outside the vehicle as a safety measure if the plug temperature exceeds 230 ^{o}F (110 ^{o}C).
Hydrogen Lines	Motor compartment, underneath vehicle floor pan running inboard of left frame rail, and between the fuel filler and the tanks	Red colored stainless steel lines carry pressurized hydrogen gas.
Hydrogen Fuel Filler	Inside fuel filler door at left-rear quarter panel	Inlet coupling receptacle for fueling hydrogen gas.

High Voltage Components

Component	Location	Description
Fuel Cell	Motor compartment	Utilizes hydrogen gas and oxygen from the air to generate high voltage DC.
Hybrid Vehicle (HV) Battery Pack	Cargo area affixed to lateral cross member	274-Volt Nickel Metal Hydride (NiMH) battery pack consisting of modules connected in series.
Power Control Unit (PCU)	Motor compartment	Converts DC current from Fuel Cell and HV battery pack to 3 phase AC current that drives high voltage electric motors/components. Also, converts AC from electric motor (regenerative braking) to DC to recharge the HV battery pack.
Electric Motor	Motor compartment	3 Phase AC permanent magnet electric motor contained in the transaxle. Driven by the PCU and used to power the vehicle. Generates electric current during “coasting” or braking.
Fuel Cell Air Compressor	Motor compartment	Pumps air to the fuel cell. Driven by the PCU through 3 Phase AC current control.
Hydrogen Pump	Underneath front center area of floor pan	Circulates hydrogen gas through the fuel cell.
Fuel Cell Water Pump	Motor compartment	Circulates coolant between the fuel cell, hydrogen pump and radiators.
Air Conditioning (A/C) Compressor	Motor compartment	Circulates Carbon Dioxide (CO_2) refrigerant through the air conditioning system.
High Voltage Cables	Motor compartment and underneath vehicle floor pan running inboard of right frame rail and at HV battery	Orange colored power cables carry high voltage DC current between the PCU and the fuel cell and between the PCU and the HV battery pack. Other orange colored cables carry 3 phase AC current between PCU and components in the motor compartment along with the hydrogen pump.

Component Locations & Descriptions (Continued)

Other Components

Component	Location	Description
12-Volt Auxiliary Battery	Motor compartment	Low voltage lead-acid battery that powers all electrical equipment except high-voltage motors and pumps.

Component Locations & Descriptions (Continued)

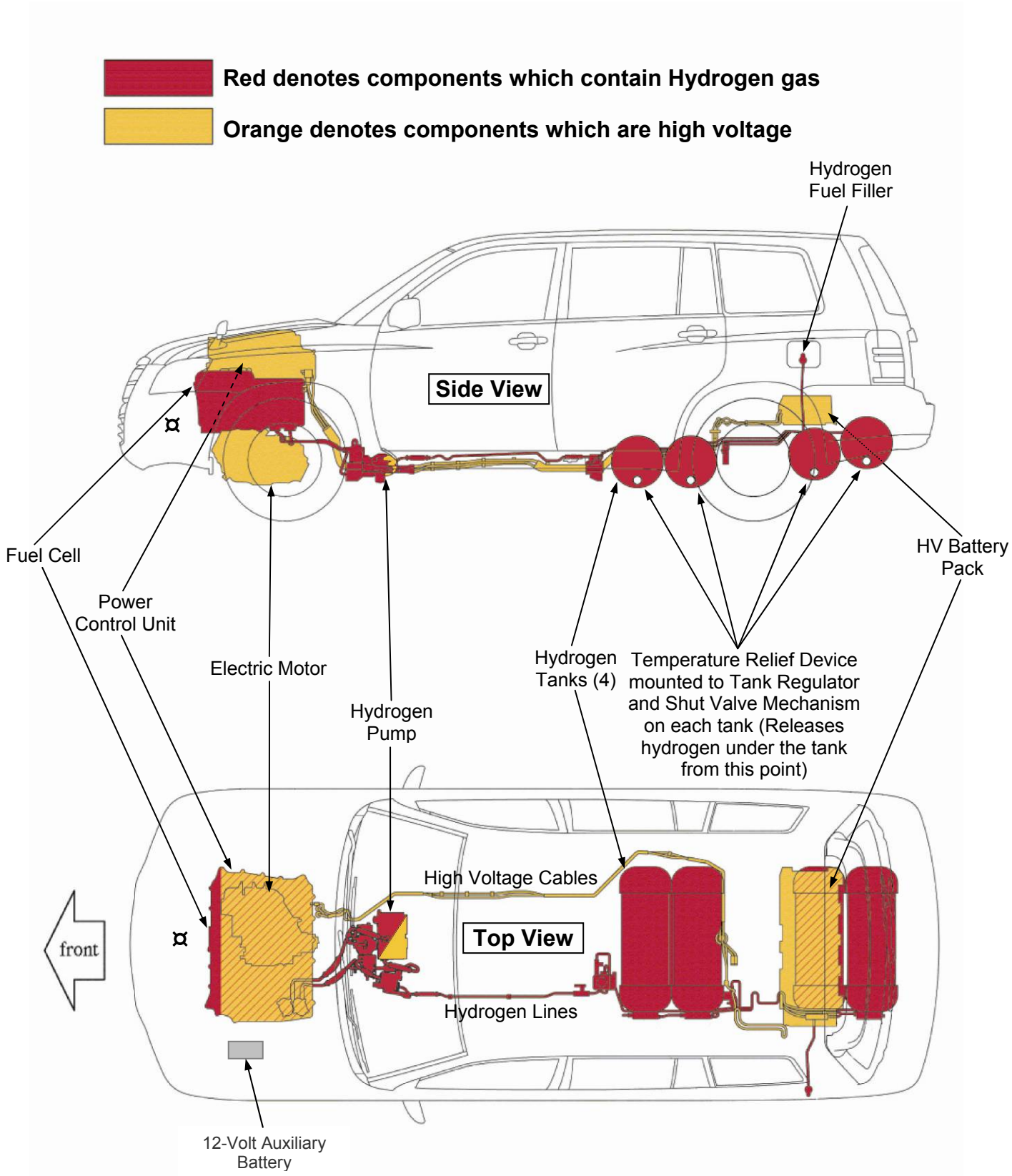

¤Although not shown in the illustration, the Fuel Cell Water Pump, Fuel Cell Air Pump, and the A/C Compressor are components located in the motor compartment. These components operate with high voltage electricity.

Vehicle Specifications

Vehicle	Seating capacity	5 passenger
	Length	186 in
	Width	71 in
	Height	66 in
	Wheelbase	107 in
	Weight	4145 lb
Frame Material	Steel unibody with aluminum hood, front fenders, side doors and roof skin	--
Performance	Maximum range (cruising)	180 mi
	Maximum speed	96 MPH

FCHV Operation

The vehicle starts and becomes operational by turning the ignition key to "START" just like any other typical automobile. However, the fuel cell operation is basically silent. It is important to recognize and understand the **READY** indicator provided in the instrument cluster. When lit, it informs the driver the vehicle is on and operational.

Never assume the vehicle is shut off just because the motor compartment is silent. Always look for the **READY** indicator status.

<u>Vehicle Operation</u>

- Whenever the **READY** indicator is on:
  1. Pressurized hydrogen gas will flow through the hydrogen gas components.
  2. High voltage electricity will flow through the high voltage components.

- Whenever the **READY** indicator is off, such as when the ignition key is turned to "ACC" or "LOCK", the hydrogen and high voltage subsystems will then be disabled by on board Electronic Control Units (ECU's) as follows:
  1. Internal solenoid operated tank shut valves will turn off (default position for safety) to stop the flow of hydrogen from the storage tanks.
  2. Normally open 12-volt relays will open (default position for safety) to isolate the high voltage potential to inside the fuel cell and HV battery only.

Airbags and Seat Belt Pretensioners

The FCHV includes as standard equipment driver and passenger front airbags and front seatbelt pretensioners. Side impact airbags are also included in the front seats. Design and operation is similar to that of the Toyota Highlander.

The airbag system is equipped with a back up power source that powers the airbags up to **90 seconds** after disconnecting the 12-Volt auxiliary battery or turning the ignition key to "ACC" or "LOCK".

Airbag and Sensor Locations

Component	Location
Driver front airbag	In steering wheel horn button (pad).
Passenger front air bag	In upper dash pad on passenger side.
Seat belt pretensioner	Inside the driver side seat belt retractor at the lower B-pillar ❶.
Seat belt pretensioner	Inside the passenger side seat belt retractor at the lower B-pillar ❶.
Side impact airbag	On the lower side of the driver seat seatback facing the door.
Side impact airbag	On the lower side of the passenger seat seatback facing the door.
Front airbag sensors (2)	*Front section of the motor compartment ❷ – for front airbags and seat belt pretensioners.
SRS computer and airbag sensor	*Mounted on the floor pan near the center console ❸ - for airbags and seat belt pretensioners.
Side impact airbag sensor	*Mounted in the lower driver side and B-pillar ❹.
Side impact airbag sensor	*Mounted in the lower passenger side and B-pillar ❹

***Location also shown in illustration on page 10**

The front passenger occupant classification system may prohibit the deployment of the frontal passenger airbag, front passenger side airbag, and front passenger seat belt pretensioner.

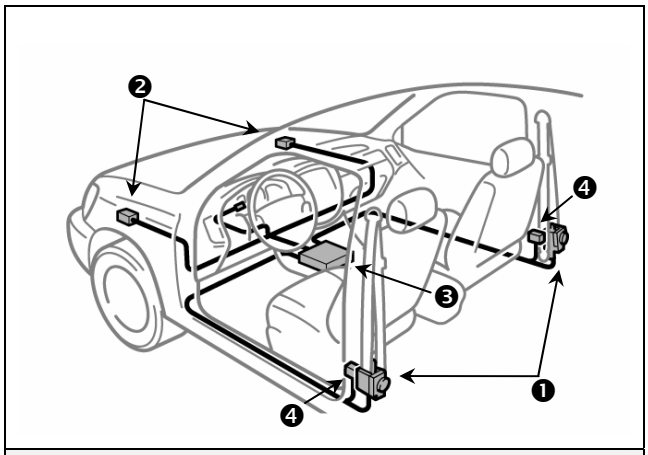

Standard Frontal Airbags and Seat Belt Pretensioners

Hydrogen Storage Tanks

The FCHV uses four hydrogen gas storage tanks to store compressed hydrogen gas at up to 5,076 PSI. The tanks are type 4 with polymer liner, wrapped in carbon fiber and meet modified Natural Gas Vehicle 2 (NGV 2) standards. When the vehicle is shut off, hydrogen is contained within each tank through normally closed, solenoid operated shut valves.

Fuel Cell

The fuel cell generates high voltage electricity by electrochemically combining hydrogen gas with oxygen from the air. The fuel cell is the main source of power for the electric motor that drives the vehicle.

- The fuel cell is sealed in a metal case and electrically insulated from the case and the vehicle's metal frame by rubber mounts and insulation plates. The metal case is rigidly mounted to the vehicle subframe in the motor compartment.

- The fuel cell is a group of cells forming a fuel cell "stack". A maximum of 400 volts can be produced for the entire "stack".

- Hydrogen gas is supplied at low pressure to the fuel cell by two red colored lines connected to the lower-left (rear) corner of the fuel cell.

- High Voltage electricity runs between the fuel cell and the PCU through orange colored high voltage cables.

Hybrid Vehicle (HV) Battery Pack

The HV battery pack stores high voltage electricity provided by the fuel cell or obtained through regenerative braking – a process whereby kinetic energy from the vehicle motion is converted to electrical energy as the vehicle "slows down". This stored electrical energy is used again to assist with propelling the vehicle or operating high voltage components. This process improves energy efficiency of the system.

- The HV battery pack is sealed in a metal case and is rigidly mounted to the rear frame cross member under the cargo area. The metal case is isolated from high voltage and concealed by fabric and plastic covers.

- The HV battery pack consists of battery modules connected in series to produce approximately 274-Volts. Each NiMH battery module is non-spillable and sealed in a plastic case.

- The electrolyte used in the NiMH battery module is an alkaline of potassium and sodium hydroxide. The electrolyte is absorbed into the battery cell plates and will form a gel that will not normally leak, even in a collision.

- High Voltage electricity runs between the HV battery pack and the PCU through orange colored high voltage cables.

HV Battery Pack	
Battery pack voltage	274-Volts
NiMH battery module dimensions (inches)	11 x 3/4 x 4
NiMH Battery module weight	2.2 lbs
Battery pack weight	100 lbs

Hydrogen Safety

General Hydrogen Gas Characteristics

- Hydrogen is a colorless, odorless, tasteless, flammable gas.
- Hydrogen gas has a flammable range of between 4% and 74% by volume in air.
- Hydrogen can ignite with low ignition energy, especially at higher concentrations. Therefore, it's important to keep sources of spark such as electric motors and static electricity away from hydrogen leaks.
- A hydrogen flame produces almost no heat radiation and tends to transfer a significant amount of heat to objects and materials impinged on by the flame, but not surrounding exposures.
- Burning hydrogen produces a faint blue flame that is difficult to see, especially in sunlight.
- It is possible to approach burning hydrogen, not see the flame and feel no heat. A UV optical detector/sensor may be used to aid in detection of a hydrogen fire (if available). A hydrogen fire may also be detected by using a long handled broom:
    1. The bristles should be made of a material that is easily ignited but does not release toxic fumes when burning, for example corn straw brooms.
    2. Hold the broom in front of you while slowly approaching the vehicle. It will ignite when passed through the hydrogen fire.
- Hydrogen is the lightest weight gas with a specific gravity of about 1/14th that of air (extremely buoyant).
- Hydrogen has a diffusion rate 10 times greater than gasoline and, unlike gasoline vapor, does not tend to pool near the ground when released to the atmosphere, but rapidly disperses upward and dissipates.
- As with most gases, asphyxiation may be possible if hydrogen displaces air in confined spaces.

Hydrogen Safety (Continued)

FCHV Hydrogen Safety System

- All components containing hydrogen gas are designed to withstand at least 1.5 times operating pressure. These components are located under the vehicle floor pan or in the motor compartment, outside of the vehicle cabin.

- Hydrogen lines ❶ are located inboard of the left frame rail below the floor pan for crash protection. Plastic and metal covers protect components under the vehicle floor pan.

- One-way check valves are employed at the inlet lines of each hydrogen tank❷, at the hydrogen filler ❸ and at locations in the hydrogen distribution lines.

- A tank regulator contained within the tank shut valve mechanism ❹ reduces pressure on the outlet hydrogen line for each tank.

- Temperature Relief Devices (TRD's) ❺ quickly vent the hydrogen to atmosphere when the temperature reaches 230 ^{o}F to prevent excessive pressure in the tanks. The venting ports are located on the lower-left side of each hydrogen storage tank.

- An ECU monitors system pressures and temperatures at the hydrogen storage tanks and along the distribution lines and components. The ECU closes tank shut valves to stop the outlet flow of hydrogen gas at each of the four tanks when:
  1. The vehicle is off (**READY** indicator off).
  2. An abnormal pressure loss (leak) or pressure increase (regulator/valve malfunction) is detected.
  3. Airbag impact sensors cause an airbag to deploy; or special impact sensors for the fuel cell system sense a predetermined level of frontal, side, or rear impact.
  4. One of four hydrogen sensors mounted on board the vehicle detects hydrogen gas accumulation. The ECU will also illuminate the "H2" warning light in the instrument cluster ❻ and sound a buzzer to warn the driver.
  5. The hood or fuel door is opened.
  6. A malfunction is detected with a shut valve.

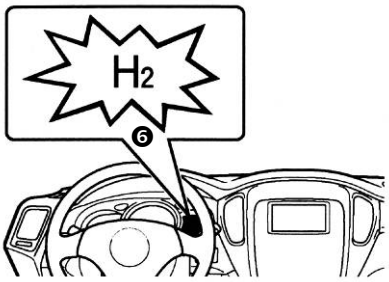

Impact (Collision) Sensor for Airbags and fuel cell system

Impact (Collision) Sensor for only the fuel cell system

Hydrogen Sensor

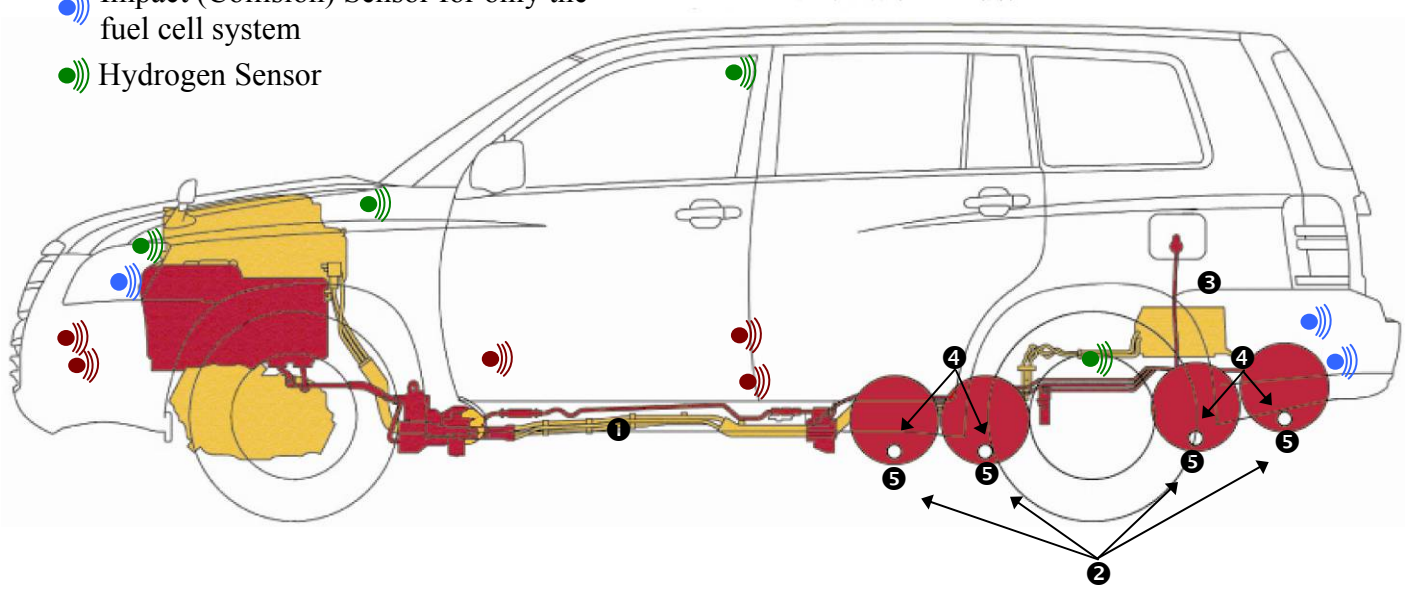

High Voltage Safety

The fuel cell and HV battery pack power the high voltage electrical system with direct current (DC) electricity. Two power cables, one positive and one negative, are routed from the fuel cell to the PCU in the motor compartment. Separately, positive and negative power cables are routed from the battery pack, under the vehicle floor pan inboard of the right frame rail, to the PCU. The PCU delivers 3 phase AC current through orange colored high voltage cables to the following components only when the **READY** indicator is on and systems are operational:

- Electric Motor
- Fuel Cell Air Pump
- Hydrogen Pump
- Water Pump
- Air Conditioning (A/C) Compressor

Occupants in the vehicle and emergency responders are separated from high voltage electricity by the following systems:

<u>Fuel Cell and Hybrid Vehicle Battery Pack</u>

- The positive and negative power cables connected to the fuel cell and those connected to the HV battery pack are controlled by 12-Volt normally open (no electricity flow) relays. When the vehicle is shut off, the relays stop electricity flow from both the fuel cell and the HV battery pack.

- A ground fault monitor continuously monitors for high voltage leakage to the metal chassis while the vehicle is running. If a malfunction is detected, the relays stop electricity flow from both the fuel cell and the HV battery pack.

- The fuel cell and battery pack relays will automatically open to stop electricity flow if:
  1. Airbag impact sensors cause an airbag to deploy; or special impact sensors for the fuel cell system sense a predetermined level of frontal, side, or rear impact.
  2. The hood or fuel filler door is opened.
  3. A malfunction is detected in the relays.

- All power cables are isolated from the metal chassis, so shock by touching the metal chassis is extremely unlikely.

- A high voltage fuse provides short circuit protection in the HV battery pack.

⚠ **WARNING:**

- *The high voltage system may remain powered for up to 5 minutes after the vehicle is shut off (***READY** *indicator off) or disabled. To prevent serious injury or death from severe burns or electric shock, avoid touching, cutting, or opening any orange high voltage power cable or high voltage component.*
- *The SRS may remain powered for up to 90 seconds after the vehicle is shut off or disabled. To prevent serious injury or death from unintentional SRS deployment, avoid breaching the SRS components.*

Emergency Response

On arrival, emergency responders should follow their standard operating procedures for vehicle incidents. Emergencies involving the FCHV may be handled like other automobiles except as noted in these guidelines for Extrication, Fire, Overhaul, Recovery, Spills, First Aid, and Submersion.

> ⚠**WARNING:**
> - Never assume the FCHV is shut off simply because it is silent.
> - Always observe the instrument cluster for the **READY** indicator status to verify whether the vehicle is on or shut off.

Extrication

- Open doors to allow fresh air ventilation to reach occupant(s)
- Immobilize Vehicle

  Chock wheels and set the parking brake (parking brake pedal located left of brake pedal).

  Move the shift lever to the **P** (park) position.

- Disable Vehicle

  Turn the ignition key to the "OFF" position, remove the ignition key and place on dash.

  Disconnect the negative cable of the 12-Volt auxiliary battery as shown in illustration A on page 13.

  -OR (if the ignition key is inaccessible)-

  Disconnect the negative cable of the 12-Volt auxiliary battery as shown in illustration A on page 13.

  Remove the IGCT and IGCTFC fuses in the engine compartment as shown in illustration B on page 13.

  Disabling the vehicle has the following effects on the hydrogen and high voltage sub systems:

  1. Tank shut valves will close and stop hydrogen gas flow at each of the four hydrogen storage tanks.
  2. High voltage is isolated to the fuel cell and the HV battery pack by 12-Volt normally open (no electricity flow) relays.
  3. The PCU and related high voltage components/wiring are disabled.
  4. SRS airbags and seat belt pretensioners are disabled.

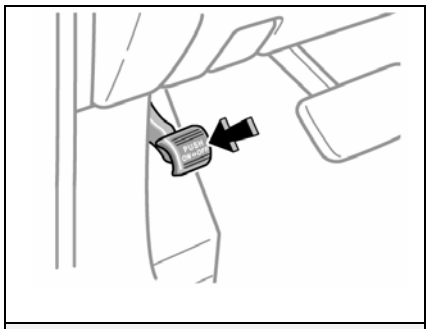

Set Parking Brake

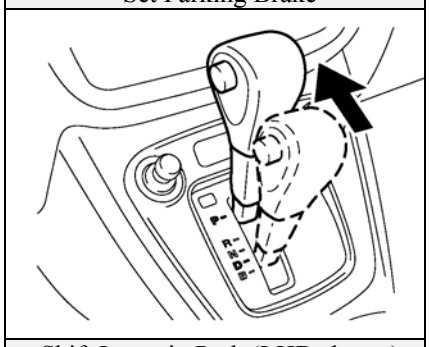

Shift Lever in Park (LHD shown)

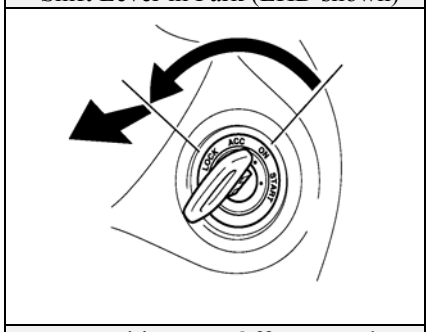

Turn Ignition Key Off, remove key

Emergency Response (Continued)

- Disconnecting the 12-Volt battery:
  1. Loosen the nut (10 mm wrench or socket).
  2. Remove the negative cable and clamp from the battery post.

Illustration A

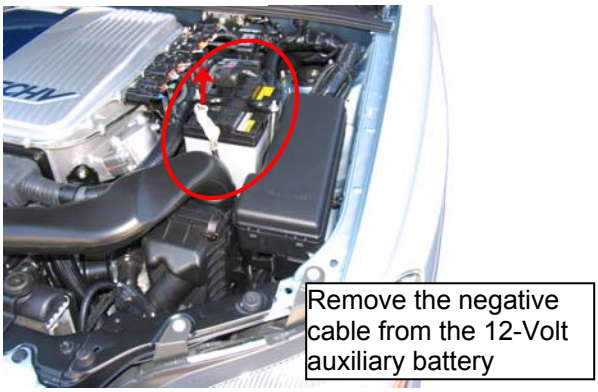

- Removing the IGCT and IGCTFC fuses:
  1. Disconnect the 12-Volt auxiliary battery as shown in illustration A.
  2. Remove the IGCT fuse and the IGCTFC fuse from the motor compartment fuse box as shown in illustration B.

Illustration B

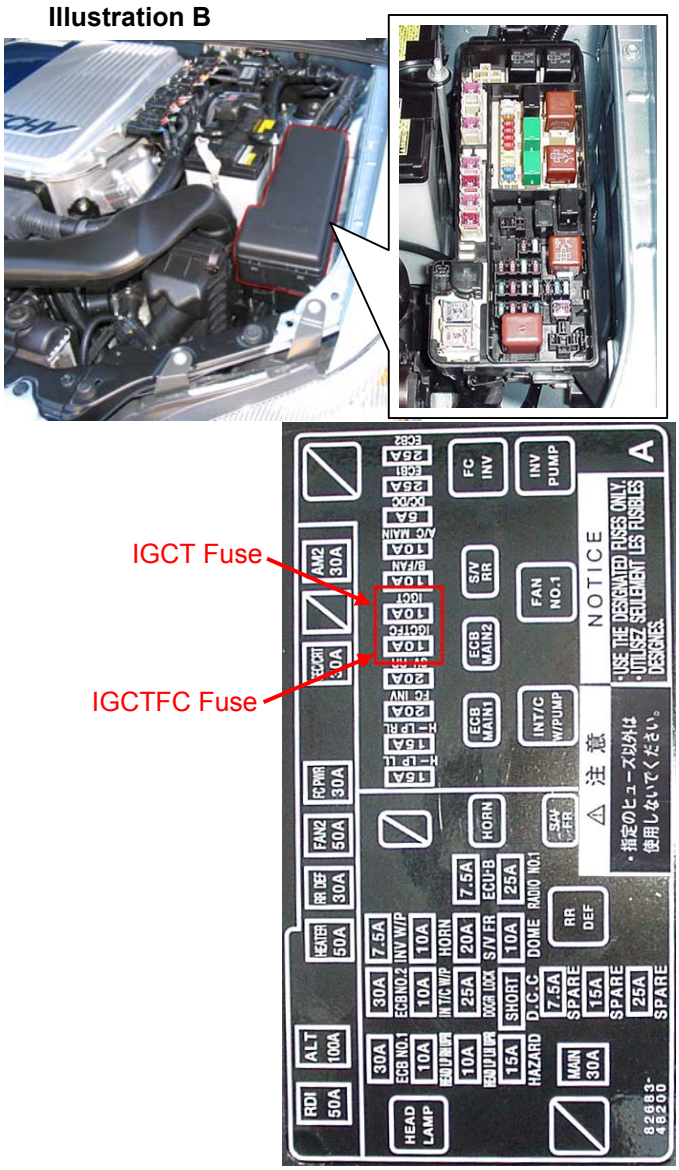

⚠WARNING:

- *The high voltage system may remain powered for up to 5 minutes after the vehicle is shut off (**READY** indicator off) or disabled. To prevent serious injury or death from severe burns or electric shock, avoid touching, cutting, or opening any orange high voltage power cable or high voltage component.*
- *Residual hydrogen gas remains in the red lines forward of the tanks, in the hydrogen pump, and in the fuel cell. Avoid touching, cutting, or opening any red hydrogen line.*
- *If hissing is heard from hydrogen lines, it may be hydrogen gas releasing. The gas may ignite causing a flame that may be invisible. Stay away from the vehicle until the hissing has stopped. Assure no active hydrogen gas leaks exist before using extricating equipment or operating any electrical systems that may create a spark.*
- *The SRS may remain powered for up to 90 seconds after the vehicle is shut off or disabled. To prevent serious injury or death from unintentional SRS deployment, avoid breaching the SRS components.*
- *If either of the disabling steps above cannot be performed, proceed with caution as there is no assurance that the hydrogen, high voltage electrical system, or the SRS airbag system are disabled.*

Emergency Response (Continued)

Extrication (Continued)

- Stabilize Vehicle
  Crib at (4) points under the vehicle along the frame "pinch weld". The front sub-frame crib point may also be used, taking care to not damage components behind the covers surrounding this crib point.
  Do not place cribbing under the hydrogen lines, hydrogen storage tanks or the high voltage power cables and related components.

  The under vehicle picture below shows locations for the recommended jacking points. Labels for hydrogen gas line locations are attached to the underbody covers. Red dotted lines indicate the location of components containing hydrogen gas. Orange dotted lines indicate components operating with high voltage.

Location of 9 labels indicating the routing path of the hydrogen lines.

Cribbing Points.

4 of the 9 labels are visible from the left side of the vehicle at ground level.

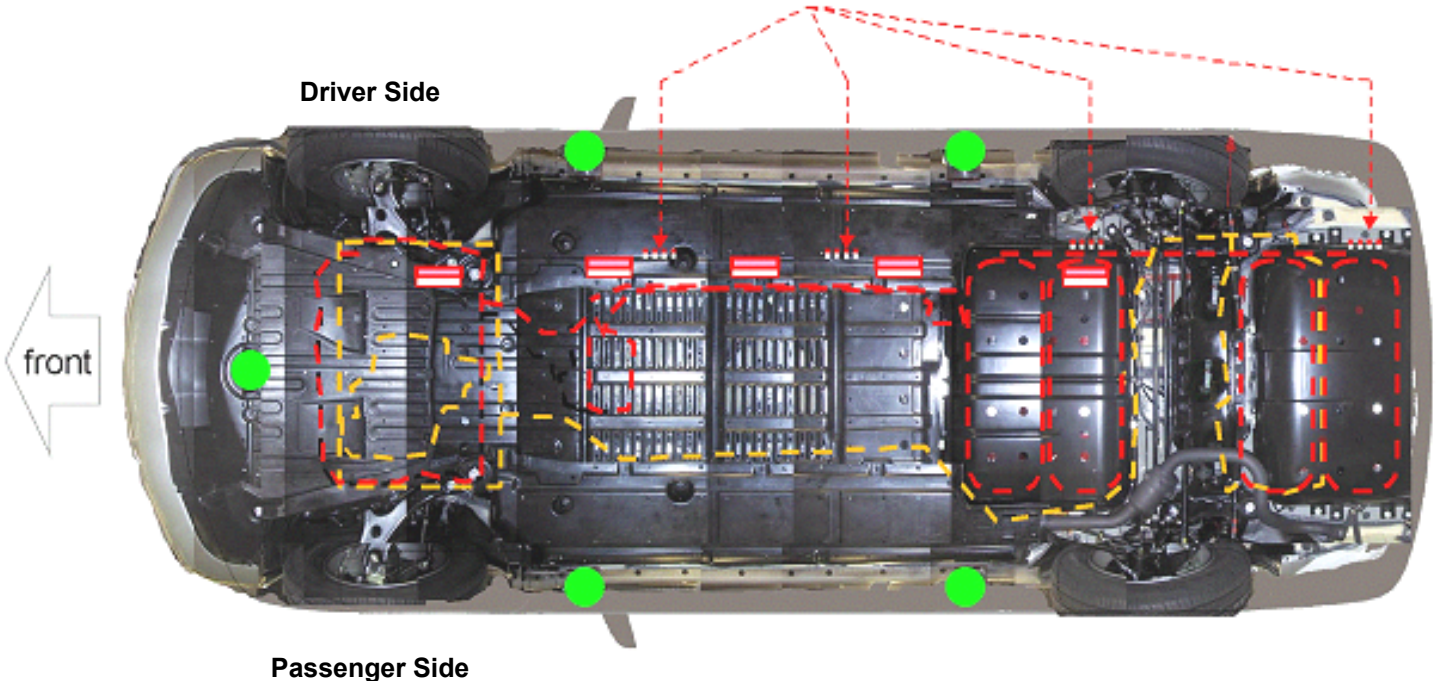

View from underneath the vehicle (Black covering installed)

Emergency Response (Continued)

Extrication (Continued)

- Access Patients

  Glass Removal

  Use normal glass removal procedures as required.

  Door Removal/Displacement

  The four side doors are constructed of aluminum. All doors can be removed by conventional rescue tools - hand, electric, and hydraulic.
  In certain situations, it may be easier to pry back the body to expose and unbolt the hinges.

  Dash Displacement

  Displace the dash by using a conventional dash roll, modified dash roll, or jacking the dash.

  Roof Removal

  The roof may be removed as there are no SRS airbag devices above the door line.

  Rescue Lift Air Bags

  Responders should not place rescue lift airbags under the hydrogen lines, hydrogen storage tanks, or high voltage power cables

Emergency Response (Continued)

Fire

Approach and extinguish a fire using proper vehicle fire fighting practices as recommended by NFPA, IFSTA, or the National Fire Academy (USA).

- Extinguishing Agent

  Water has been proven to be a suitable extinguishing agent.

- Initial Fire Attack

  Perform a fast, aggressive fire attack.
  Divert the runoff from entering watershed areas.

  Attack teams may not be able to identify an FCHV until the fire has been knocked down and overhaul operations have commenced.

- Fire Fed by Hydrogen Gas

  Each hydrogen storage tank is fitted with a Temperature Relief Device (TRD). When the temperature around the TRD reaches 230 ºF, hydrogen is quickly released to prevent excessive pressure in the tanks. The release of hydrogen gas from a TRD can be identified by the loud "hissing" sound that it emits.

  This release of hydrogen can ignite in a concentrated flame stream. The venting emanates from the tank valve mechanism on the left side of the tank.

  If the hydrogen gas has ignited, the fire attack crew should pull back to a safe distance and allow the hydrogen gas fed fire to burn until the hydrogen feeding the fire completely vents to atmosphere. During this time, crews may utilize a water stream or fog pattern from a maximum distance to protect exposures or to control the path of smoke, taking care not to extinguish hydrogen-fed flames. If flames from the hydrogen gas fire are accidentally extinguished, hydrogen gas may accumulate resulting in a risk of explosive reignition.

- Fire in the HV Battery Pack

  Should a fire occur in the NiMH HV battery pack, the incident commander will have to decide whether to pursue an offensive or defensive attack.

⚠WARNING:

- *Potassium hydroxide and sodium hydroxide are key ingredients in the NiMH battery module electrolyte.*
- *The modules are contained within a metal case and access is limited to a small opening on the top.*
- *The cover should **never** be breached or removed under any circumstances, including fire. Doing so may result in severe electrical burns, shock or electrocution.*

When allowed to burn themselves out, the FCHV NiMH battery modules burn rapidly and can quickly be reduced to ashes except for the metal alloy cell plates.

Offensive Fire Attack

Flooding the HV battery pack, located in the cargo area, with copious amounts of water at a safe distance will effectively control the HV battery pack fire by cooling the adjacent NiMH battery modules to a point below their ignition temperature. The remaining modules on fire, if not extinguished by the water, will burn themselves out.

Emergency Response (Continued)

Fire (Continued)

- Fire in the HV Battery Pack (Continued)

  Defensive Fire Attack
  If the decision has been made to fight the fire using a defensive attack, the fire attack crew should pull back to a safe distance and allow the NiMH battery modules to burn themselves out. During this defensive operation, fire crews may utilize a water stream or fog pattern to protect exposures or to control the path of smoke.

Overhaul
During overhaul, if not already done, immobilize and disable the vehicle.

- Immobilize Vehicle
  Chock wheels and set the parking brake.
  Move the shift lever to the **P** (park) position.

- Disable Vehicle (refer to illustrations on page 13)
  Turn the ignition key to the "OFF" position, remove the ignition key and place on dash.
  Disconnect 12-Volt auxiliary battery.

  -OR (if the ignition key is inaccessible)-

  Disconnect the 12-Volt auxiliary battery as shown in illustration A on page 13.
  Remove the IGCT and IGCTFC fuses in the engine compartment as shown in the illustration B on page 13.

  Disabling the vehicle has the following effects on the hydrogen and high voltage sub systems:
  1. Tank shut valves will close and stop hydrogen gas flow at each of the four hydrogen storage tanks.
  2. High voltage is isolated to the fuel cell and the HV battery pack by 12-Volt normally open (no electricity flow) relays.
  3. The PCU and related high voltage components/wiring are disabled.
  4. SRS airbags and seat belt pretensioners are disabled.

⚠**WARNING:**

- *The high voltage system may remain powered for up to 5 minutes after the vehicle is shut off (***READY** *indicator off) or disabled. To prevent serious injury or death from severe burns or electric shock, avoid touching, cutting, or opening any orange high voltage power cable or high voltage component.*
- *Residual hydrogen gas remains in the red lines forward of the tanks, in the hydrogen pump, and in the fuel cell. Avoid touching, cutting, or opening any red hydrogen line.*
- *If hissing is heard from hydrogen lines, it may be hydrogen gas releasing. The gas may ignite causing a flame that may be invisible. Stay away from the vehicle until the hissing has stopped. Assure no active hydrogen gas leaks exist before using extricating equipment or operating any electrical systems that may create a spark.*
- *The SRS may remain powered for up to 90 seconds after the vehicle is shut off or disabled. To prevent serious injury or death from unintentional SRS deployment, avoid breaching the SRS components.*
- *If either of the disabling steps above cannot be performed, proceed with caution as there is no assurance that the hydrogen, high voltage electrical system, or the SRS airbag system are disabled.*

Recovery of the NiMH HV Battery Pack
Clean up of the HV battery pack can be accomplished by the vehicle recovery crew without further concern from runoff or spill.

Emergency Response (Continued)

Spills

The FCHV contains the same common automotive fluids used in other Toyota vehicles, with the exception of the NiMH electrolyte used in HV battery pack. The NiMH battery electrolyte is a caustic alkaline (pH 13.5) that is damaging to human tissues. The electrolyte, however, is absorbed in the cell plates and will not normally spill or leak out even if a battery module is cracked. A catastrophic crash that would breach both the metal battery pack case and the plastic battery module would be a rare occurrence.

Similar to using baking soda to neutralize a lead-acid battery electrolyte spill, a dilute boric acid solution or vinegar is used to neutralize a NiMH battery electrolyte spill.

During an emergency, Material Safety Data Sheets (MSDS) may be requested by contacting CHEMTREC at (800) 424-9300.

- Handle NiMH Electrolyte Spills Using The Following Personal Protective Equipment (PPE):
  Splash shield or safety goggles. Fold down helmet shields are not acceptable for alkaline spills.
  Rubber, latex or Nitrile gloves.
  Apron suitable for alkaline.
  Rubber boots.

- Neutralize NiMH Electrolyte
  Use a boric acid solution or vinegar.
  Boric acid solution - 800 grams boric acid to 20 liters water or 5.5 ounces boric acid to 1 gallon of water.

First Aid

Emergency responders may not be familiar with a NiMH electrolyte exposure when rendering aid to a patient. Exposure to the electrolyte is unlikely except in a catastrophic crash or through improper handling. Utilize the following guidelines during an exposure.

> ⚠**WARNING:**
> *The NIMH battery electrolyte is a caustic alkaline (pH 13.5) that is damaging to human tissue.*

- Wear Personal Protective Equipment (PPE)
  Splash shield or safety goggles. Fold down helmet shields are not acceptable for acid or alkaline spills.
  Rubber, latex or Nitrile gloves.
  Apron suitable for alkaline.
  Rubber boots.

- Absorption
  Perform gross decontamination by removing affected clothing and properly disposing of the garments.
  Rinse the affected areas with water for 20 minutes.
  Transport to the nearest emergency medical care facility.

- Inhalation Non-Fire Situations
  No toxic gases are emitted under normal conditions.

- Inhalation Fire Situations
  Toxic gases are given off as the by-product of combustion. All responders in the Hot Zone should wear the proper PPE for fire fighting including SCBA.
  Remove patient from the hazardous environment to a safe area and administer oxygen.
  Transport to the nearest emergency medical care facility.

Emergency Response (Continued)

First Aid (Continued)

- Ingestion

  Do not induce vomiting.
  Allow patient to drink large quantities of water to dilute electrolyte (Never give water to an unconscious person).
  If vomiting occurs spontaneously, keep patients head lowered and forward to reduce the risk of aspiration.
  Transport to the nearest emergency medical care facility.

Submersion

To safely handle an FCHV that is fully or partially submerged in water, disable the high voltage electrical system and SRS airbags.

- Remove vehicle from the water.

- Drain water from the vehicle if possible.

- Follow the extrication and vehicle disabling procedure (pages 12 - 13).

Roadside Assistance

Roadside assistance is available by calling (800) 853-5423 - 24 hours a day, 7 days a week.

If you suspect a hydrogen gas leak or damage to the high voltage system, disable the vehicle using one of the methods described on page 12 of this guide. Do not start the vehicle. Contact the roadside assistance call center at 800-853-5423 to have the vehicle transported to the FCHV service facility. Do not take the vehicle to a Toyota Dealer. Toyota Dealers are not equipped to service or repair the FCHV.

Towing

If the vehicle needs to be moved to a safe location prior to being transported to the FCHV service facility, it must be towed on a flatbed tow truck. The FCHV has less ground clearance than conventional vehicles. Take care to not damage the underbody covers or components when winching the vehicle onto the flatbed.

- To shift the vehicle to neutral, turn the ignition switch to the "ON" position, press the brake pedal, and while pressing the shift lever button, move the lever to the **N** (neutral) position.
- If the shift lever cannot be moved out of **P** (park) with the above method, push and hold the shift lock release button and move the shift lever to **N** (neutral).

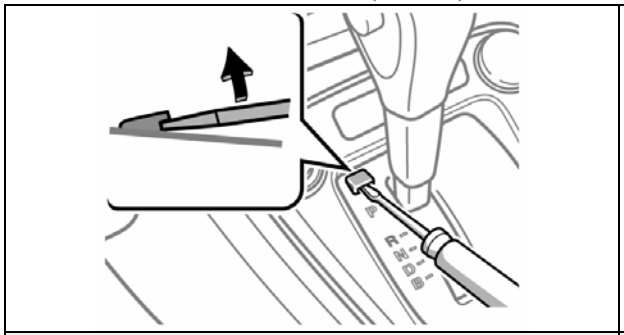

Shift Lock Release Button Cover

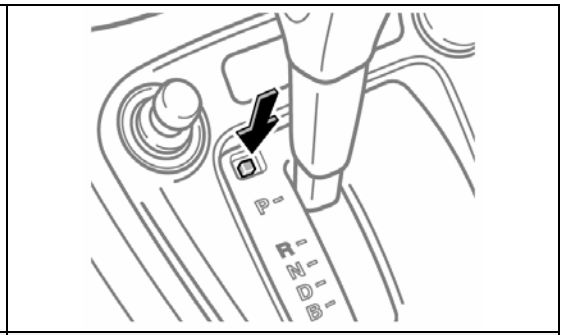

Push button to move shift lever from **P** (park)

⚠WARNING:
Do not tow the vehicle with the front wheels on the ground as the motor may start generating electricity, depending on the vehicle's damage state, resulting in an electrical spark and fire hazard.

Spare Tire

A spare tire and jack are not provided with this vehicle. If a minor puncture is found in the tread area of the tire, utilize the tire repair kit located in the rear cargo compartment. Follow the instructions in the kit to repair the tire.

Vehicle Automatic Shut Off Modes

The FCHV is designed to automatically shut off the vehicle if the fuel filler door or hood is opened. To restart the vehicle, the fuel filler door and the hood must be closed.

Jump Starting

If one or more of the following symptoms occur, the 12-Volt auxiliary battery may be discharged.

- The instrument cluster gauges do not light when the ignition switch is turned to the "ON" position.
- The vehicle does not start (**READY** does not come on).
- The headlights are darker than normal.
- The horn volume is lower than normal or does not sound.

If the 12-Volt auxiliary battery is discharged, it cannot be jumped started with another battery since the interlock switch will not allow the vehicle to start when the hood is opened. Charge the battery, close the hood, and then try to start the vehicle.

Version 2a